| REV. | ECN.NO. | APPD. |
|---|---|---|
| A | EXXXXXXXXXX | yangguifeng |

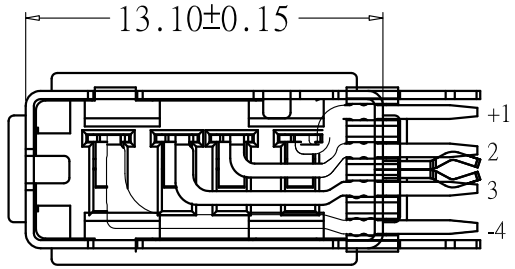


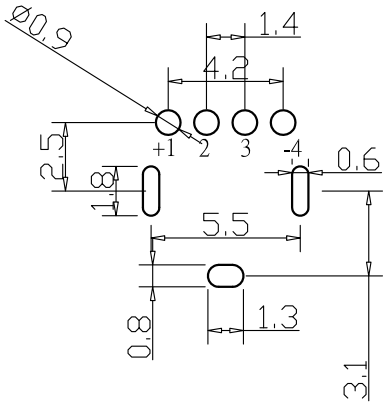


NOTES:

1.MATERIAL:
- 1.1 Housing:thermoplastic plastics
- 1.2 terminals:Copper Alloy
  - Gold plated in contact area:
  - Tin plated in termination
  - Nickel Plated overall
- 1.3 Shell:Steel&Copper Alloy
  - Nickel Plated overall

2.ELECTRICAL CHARACTERISTICS:
- 2.1 Rating Current :1.5 Ampere
- 2.2 Rating Voltage :30 V Max
- 2.3 Contact Resistance:30 Milli ohms
- 2.4 Insulation Resistance:1000 Mega ohms Min.

3.MECHANICAL CHARACTERISTICS:
- 3.1 Connector Mating force：35N MAX(3.57Kgf)
- 3.2 Connector Unmating force:10N min(1.02Kgf)
- 3.3 Durability:1500Cycles.

4.ENVIRONMENT CHARACTERISTICS:
- 4.1 Operating temperature:−0℃ to +50℃
- 4.2 Storage temperature:−20℃ to +60℃

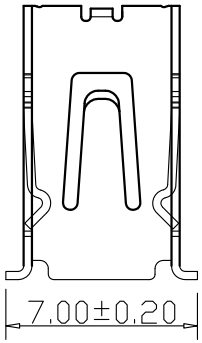


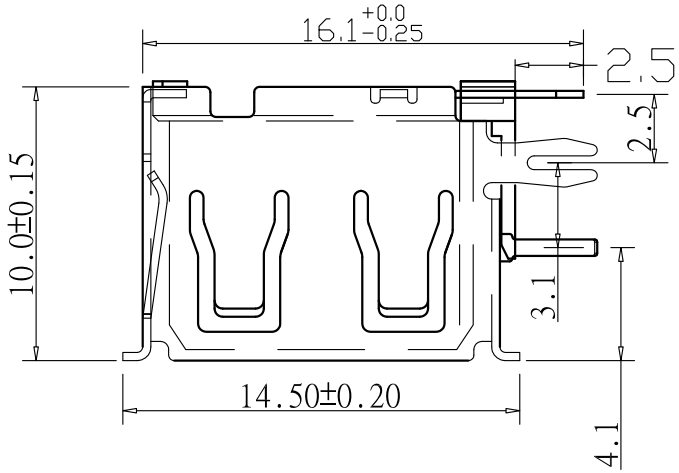


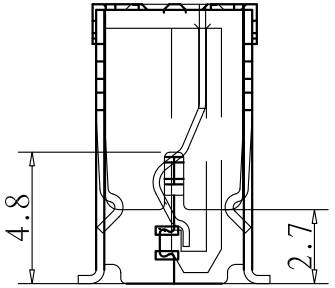


U226−2421−G24018

- 1:吸塑盒
- 4:橙色
- 1:铁壳镀镍
- G:半金G/Fu″
- 2:PBT

| TOLERANCE UNLESS OTHERWISE SPECIFIED | | HLW 深圳市华联威电子科技有限公司 HUA LIAN WEI TECHNOLOGY ELECTRONICS CO;LTD. | | | | |
|---|---|---|---|---|---|---|
| .XXX ±0.10 .XX ±0.20 .X ±0.30 | .X° ±3° .XX° ±2° | | | | | |
| APPROVED | | PART NAME: | AF 侧插10.0卷边 | | | |
| CHECKED | | PART No: | U226−2421−G24018 | | | C |
| DRAWED | yangguifeng | PROJECTION: | UNIT: | SCALE | SHEET | REV. |
| DATE | 2021.12.01 | | mm | 1:1 | 1 OF 1 | A |