REV.	ECN.NO.	APPD.
A	/	/

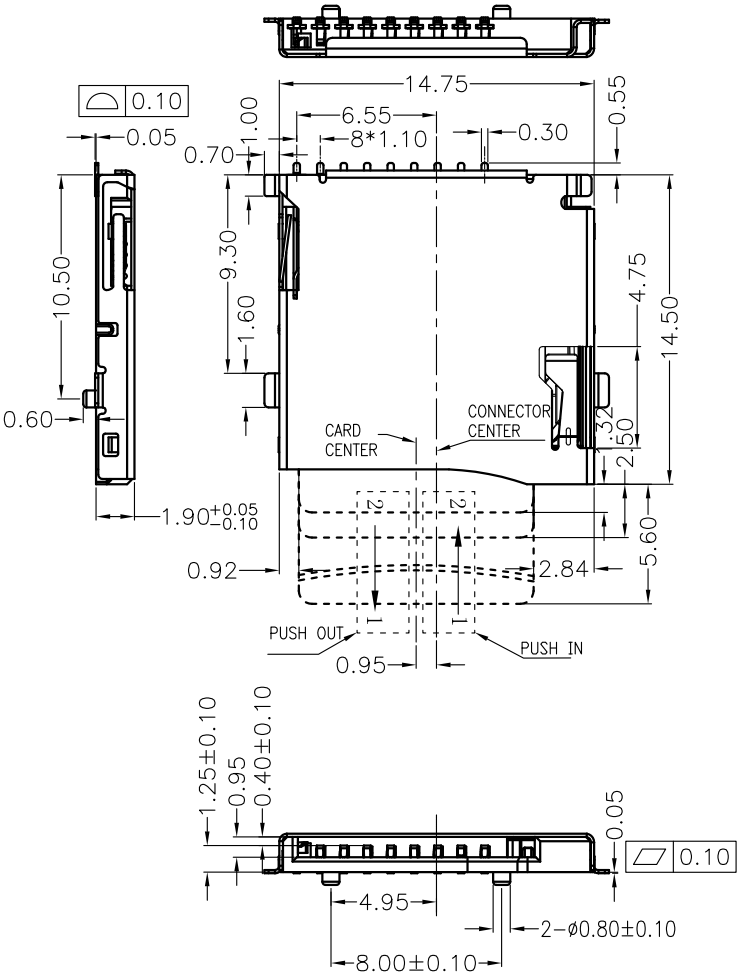

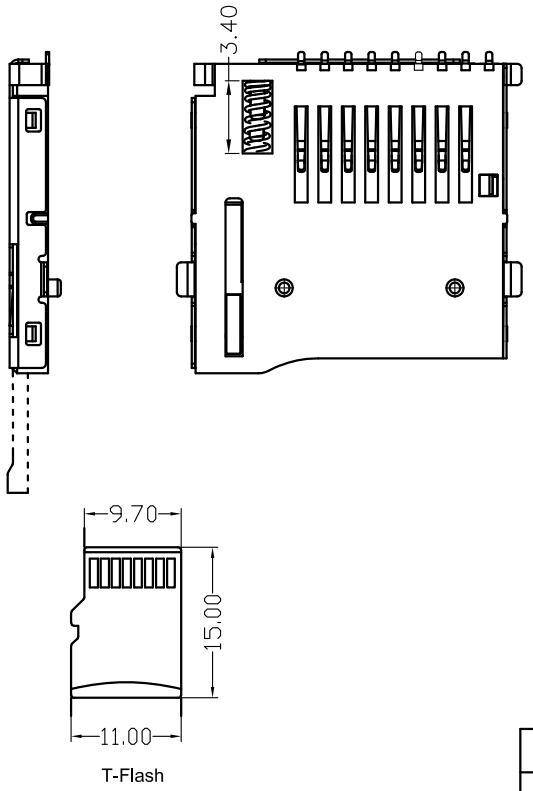

T-Flash

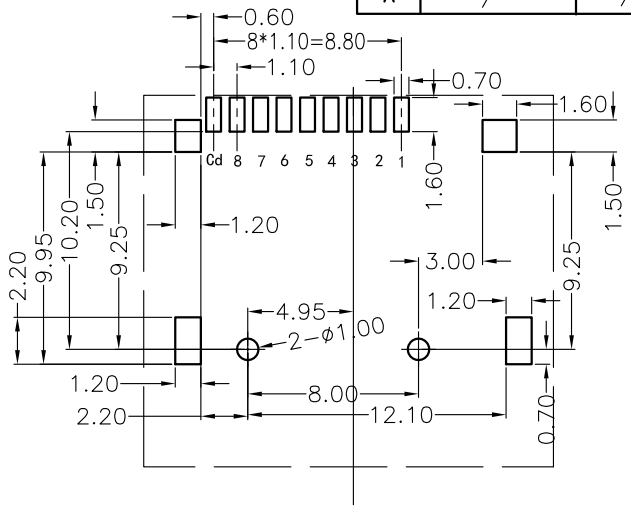

RECOMMENDED P.C.B HOLE LAYOUT

COMPONENT SIDE VIEW(TOLERANCE:+/-0.05)

*Electrical Characteristics:
Contact Current Rating:0.5 Amperes.
Dielectric Withstanding Voltage:AC500V r.m.s.
Insulation Resistance:1000 MΩ Minimum.
Contact Resistance:100 mΩ Maximum.
*Environmental:
Operating Temperature:−25°C~+90°C.
*Environmental:
Mating Cyeles:5000~10,000 Insertions.
*Mechanical Characteristics:
Card Push Insertion/Out Force:1.4kgf. MAX
Contact Separation Force:0.20kgf Minimum.
*Material:
Insulator:HI−Temp Plastic UL 94V−O Rated.
Cantact:Copper Alloy(t=0.15mm).
Shell:Stainless Steel(t=0.20mm).
Spring:SWP.

SD5209-020-XXR

G:镀半金G/Fu"

6:LCP黑色

IN NO.	NAME	YTPE	DESCRIPTION
1	DAT2	I/O/PP	DATE LINE(BIT2)
2	CD/DAT3	I/O/PP	CARD DETECT DATE LIN(BIT3)
3	CMD	PP	COMMAND RESPONSE
4	VDD	S	SUPPLY VOLTAGE
5	CLX	I	CLOCK
6	VSS	S	SUPPLY VOLTAGE GROUND
7	DAT0	I/O/PP	DATE LINE(BIT0)
8	DAT1	I/O/PP	DATE LINE(DIT1)

TOLERANCE UNLESS OTHERWISE SPECIFIED		HLW 深圳市华联威电子科技有限公司 HUA LIAN WEI TECHNOLOGY ELECTRONICS CO;LTD.				
.XXX ±0.10 .XX ±0.20 .X ±0.30	.X° ±3° .XX° ±2°					
APPROVED		PART NAME:	TF外焊 PUSH			
CHECKED		PART No:	SD5209-020-G6R			C
DRAWED	yangguifeng	PROJECTION:	UNIT:	SCALE	SHEET	REV.
DATE	2021.11.15		mm	1:1	1OF1	A