REV.	ECN.NO.	APPD.
A	/	/

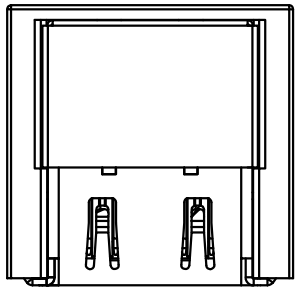

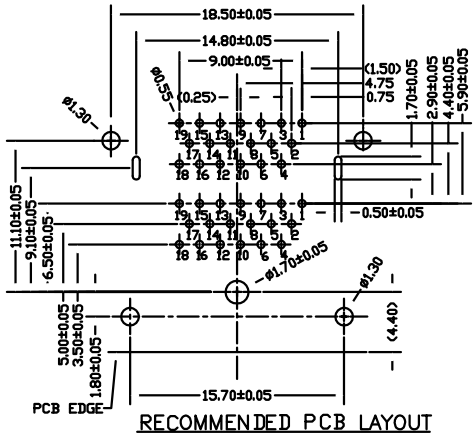

RECOMMENDED PCB LAYOUT
(THICKNESS=1.6±0.15mm)

NOTES:
1.MATERIAL:
1.1 Housing:thermoplastic plastics
1.2 terminals:Copper Alloy
Gold plated in contact area:
Tin plated in termination
Nickel Plated overall
1.3 Shell:Steel&Copper Alloy
Nickel/Au Plated overall
2.ELECTRICAL CHARACTERISTICS:
2.1 Rating Current :0.5 Ampere
2.2 Rating Voltage :40 V Max
2.3 Contact Resistance:30 Milli ohms
2.4 Insulation Resistance:100 Mega ohms Min.
3.MECHANICAL CHARACTERISTICS:
3.1 Connector Mating force: 4.5kg MAX
3.2 Connector Unmating force:1.0Kg min
3.3 Durability:10000Cycles.
4.ENVIRONMENT CHARACTERISTICS:
4.1 Operating temperature:−20℃ to +85℃
4.2 Storage temperature:−20℃ to +65℃

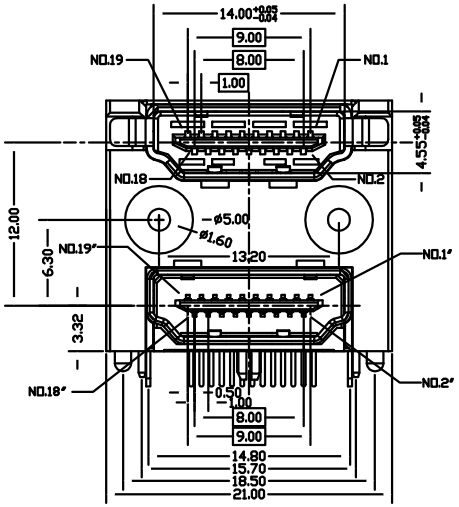

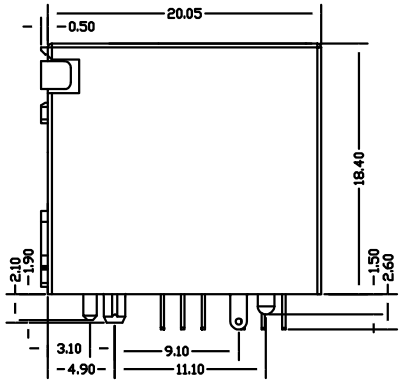

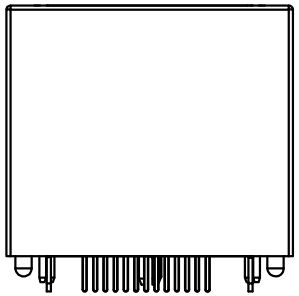

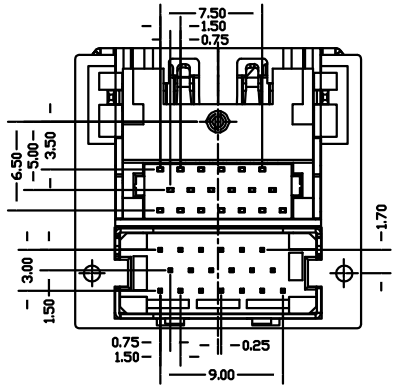

HD21−1015−G61018
5:Copper alloy Ni plating
G:Au G/Fu"
6:LCP
1:Black
1:tray

SPECIFICATIONS

SPECIFICATIONS
OPERATING CURRENT: 0.5A MAX.
OPERATION TEMPERATURE: −25°C TO +85°C
DIELECTRIC WITHSTANDING VOLTAGE:
500Volts AC BETWEEN ADIACENT TERMINAL(UNMATE)
300Volts AC BETWEEN ADIACENT TERMINAL(MATE)
INSULATION RESISTANCE:
100Mohm MIN.(UNMATED);10Mohm MIN.(MATED)

TOLERANCE UNLESS OTHERWISE SPECIFIED		HLW 深圳市华联威电子科技有限公司 HUA LIAN WEI TECHNOLOGY ELECTRONICS CO;LTD.				
.XXX ±0.10 .XX ±0.20 .X ±0.30	.X° ±3° .XX° ±2°					
APPROVED		PART NAME:	双层 HDMI38P 无耳无盖			
CHECKED		PART No:	HD21−1015−G61018			C
DRAWED	weihong	PROJECTION:	UNIT:	SCALE	SHEET	REV.
DATE	2021.7.23		mm	1:1	1OF1	A