REV.	ECN.NO.	APPD.
A	/	/

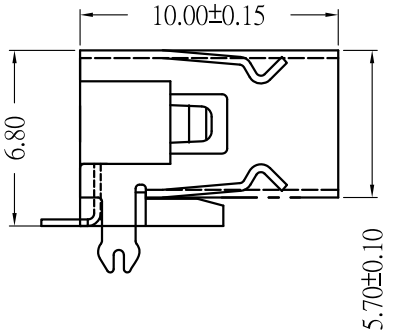

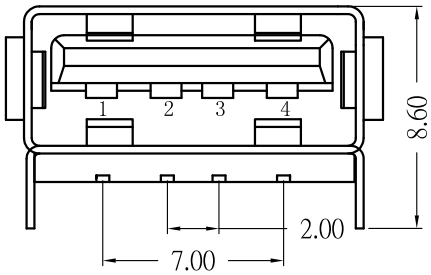

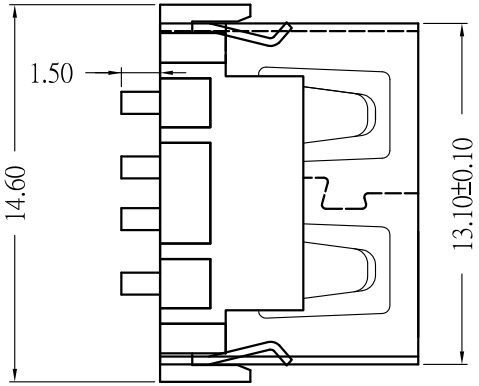

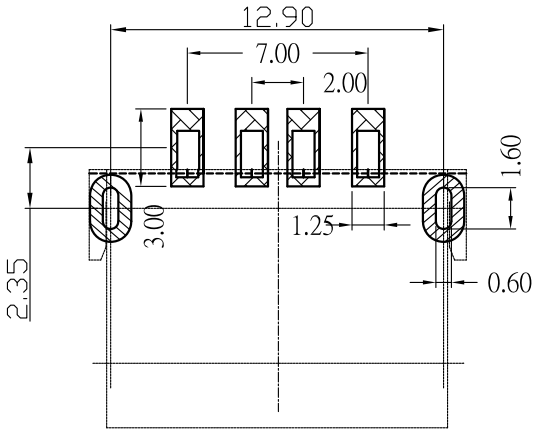

RECOMMENDED PCB LAYOUT

DIMENSION TOLERANCE: ±0.05

NOTES:

1.MATERIAL:
- 1.1 Housing:thermoplastic plastics
- 1.2 terminals:Copper Alloy
  - Gold plated in contact area:
  - Tin plated in termination
  - Nickel Plated overall
- 1.3 Shell:Steel&Copper Alloy
  - Nickel Plated overall

2.ELECTRICAL CHARACTERISTICS:
- 2.1 Rating Current :1.5 Ampere
- 2.2 Rating Voltage :30 V Max
- 2.3 Contact Resistance:30 Milli ohms
- 2.4 Insulation Resistance:1000 Mega ohms Min.

3.MECHANICAL CHARACTERISTICS:
- 3.1 Connector Mating force: 35N MAX(3.57Kgf)
- 3.2 Connector Unmating force:10N min(1.02Kgf)
- 3.3 Durability:1500Cycles.

4.ENVIRONMENT CHARACTERISTICS:
- 4.1 Operating temperature:-0℃ to +50℃
- 4.2 Storage temperature:-20℃ to +60℃

U221-7611-G21017

- 1:铁壳镀镍
- G:半金G/Fu"
- 2:PBT
- 1:黑色
- 1:吸塑盘

Contact Number	Signal Name
1	VBUS
2	D-
3	D+
4	GND

TOLERANCE UNLESS OTHERWISE SPECIFIED		HLW 深圳市华联威电子科技有限公司 HUA LIAN WEI TECHNOLOGY ELECTRONICS CO;LTD.				
.XXX ±0.10 .XX ±0.20 .X ±0.30	.X° ±3° .XX° ±2°					
APPROVED		PART NAME:	USB AF 短体6.8 后脚无卷边			
CHECKED		PART No:	U221-7611-G21017			C
DRAWED	chenyiting	PROJECTION:	UNIT:	SCALE	SHEET	REV.
DATE	2022.10.09		mm	1:1	1OF1	A