REV.	ECN.NO.	APPD.
A0	/	/

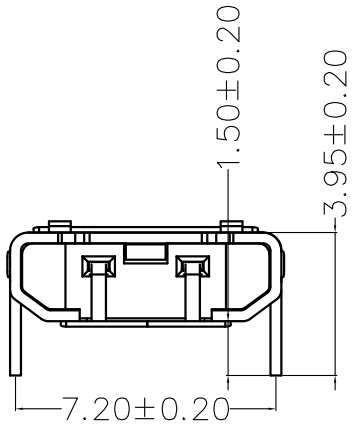

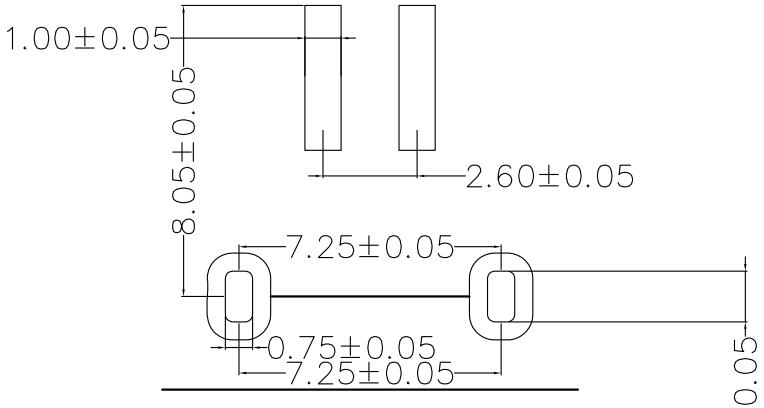

PCB LAYOUT

NOTES:
1.MATERIAL:
1.1 Housing: thermoplastic plastics,
1.2 terminals:Copper Alloy
Gold plated overall
1.3 Shell:Steel&Copper Alloy
Nickel/Tin Plated overall
2.ELECTRICAL CHARACTERISTICS:
2.1 Rating Current :1.5 Ampere
2.2 Rating Voltage :30 V Max
2.3 Contact Resistance:50 Milli ohms
2.4 Insulation Resistance:100 Mega ohms Min.
3.MECHANICAL CHARACTERISTICS:
3.1 Connector Mating force: 35N MAX
3.2 Connector Unmating force:7N min
4.ENVIRONMENT CHARACTERISTICS:
4.1 Operating temperature:-0℃ to +50℃
4.2 Storage temperature:-20℃ to +60℃

U444-7215-G61078
5:铜壳镀镍
G:半金G/Fu"
1:黑色
6:LCP
7:PE袋装

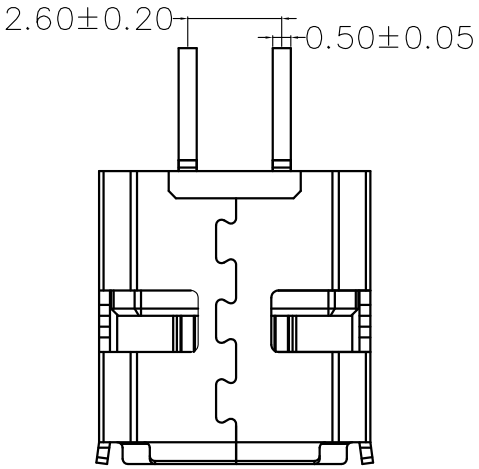

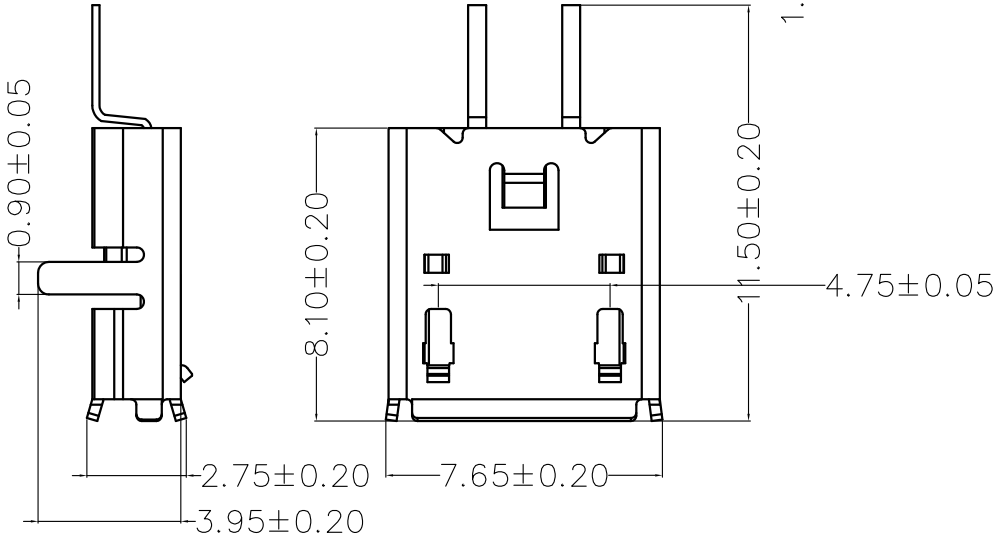

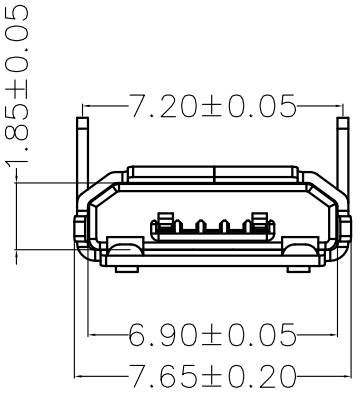

TOLERANCE UNLESS OTHERWISE SPECIFIED		HLW 深圳市华联威电子科技有限公司 HUA LIAN WEI TECHNOLOGY ELECTRONICS CO;LTD.				
.XXX ±0.10 .XX ±0.20 .X ±0.30	.X° ±3° .XX° ±2°					
APPROVED		PART NAME:	MICRO 2P/F 母座 端子贴片SMT			
CHECKED		PART No:	U444-7215-G61078			C
DRAWED	chenyiting	PROJECTION:	UNIT:	SCALE	SHEET	REV.
DATE	2023.04.07		mm	1:1	1OF1	A0