由 Autodesk 教育版产品制作

REV.	ECN.NO.	APPD.
A	EXXXXXXXXXX	yangguifeng

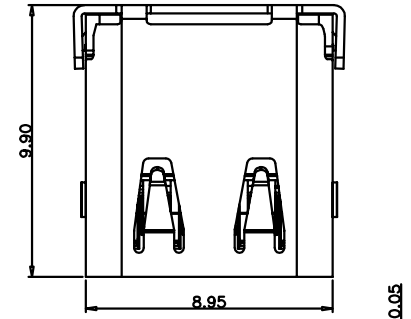

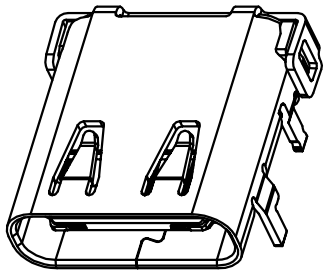

A1	GND	B12	GND
A2	SSTXP1	B11	SSRXP1
A3	SSTXN1	B10	SSRXN1
A4	VBUS	B9	VBUS
A5	CC1	B8	SBU2
A6	DP1	B7	DN2
A7	DN1	B6	DP2
A8	SBU1	B5	CC2
A9	VBUS	B4	VBUS
A10	SSRXN2	B3	SSTXN2
A11	SSRXP2	B2	SSTXP2
A12	GND	B1	GND
PIN	SIGNAL NAME	PIN	SIGNAL NAME

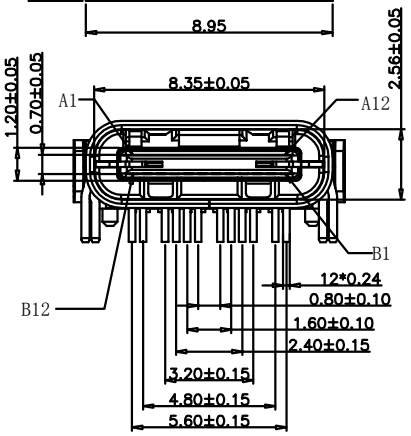

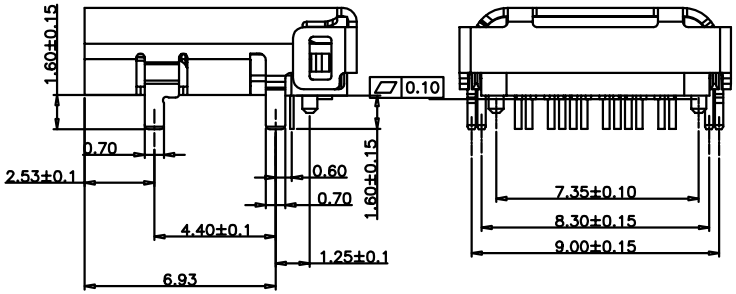

NOTES:
1.MATERIAL:
1.1 Housing:thermoplastic plastics
1.2 terminals:Copper Alloy
Gold plated in contact area:
Tin plated in termination
Nickel Plated overall
1.3 Shell:Steel&Copper Alloy
Nickel/Au Plated overall
2.characteristics:
2.1 Rating Voltage : 30V AC.
2.2 Rating Current:
5A for Vbus PIN;1.25A for Vconn PIN
2.3 Contact Resistance:40 mΩ MAX.
2.4 Insulation Resistance:100 MΩ MIN.
2.5 Withstanding Voltage:AC 100V
2.6 Mating force: 5~20N MAX
2.7 Extraction force:8~20N Min
2.8 Life test:10000Cycles MIN.
2.9 Temperature Range: -30℃~+80℃.
The product must be compliance ROHS

NO	DESCRIPTION	MATERIAL	REMARKS
5	铁壳	SUS 201, T=0.30	NI Plated
4	弹片	SUS 316, T=0.10	---
3	铁片	SUS 304, T=0.20	---
2	端子	C1814, T=0.12	Au/NI Plated
1	半成品	LCP UL94V-0	BLACK

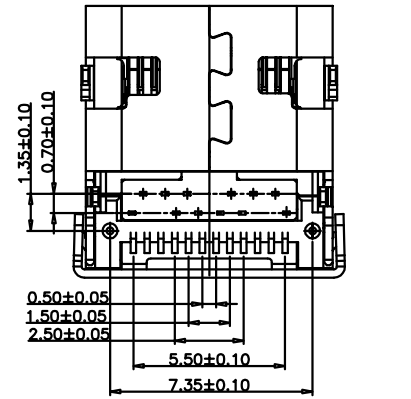

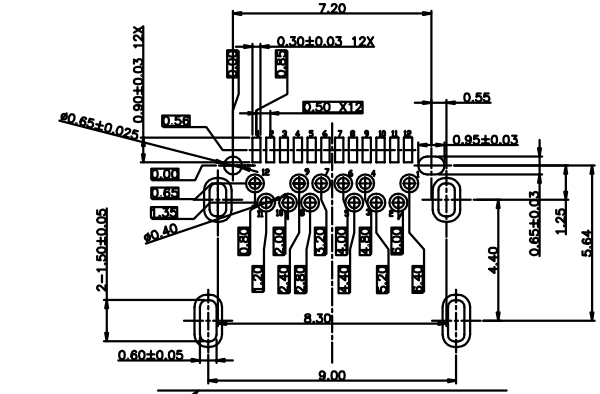

RECOMMENDED P.C.B. LAYOUT (T:1.00mm)
TOLERANCE UNSPECIFIED ±0.05mm

U572-B01B-G61038
B:不锈钢镀镍
G:半金G/Fu"
6:LCP
3:载带
1:黑色

TOLERANCE UNLESS OTHERWISE SPECIFIED		HLW 深圳市华联威电子科技有限公司 HUA LIAN WEI TECHNOLOGY ELECTRONICS CO;LTD.				
.XXX ±0.10 .XX ±0.20 .X ±0.30	.X° ±3° .XX° ±2°					
APPROVED		PART NAME:	TYPE C母座24P板上前插后贴半包式			
CHECKED		PART No:	U572-B01B-G61038			C
DRAWED	yangguifeng	PROJECTION:	UNIT:	SCALE	SHEET	REV.
DATE	2021.12.01		mm	1:1	1 OF 1	A

由 Autodesk 教育版产品制作